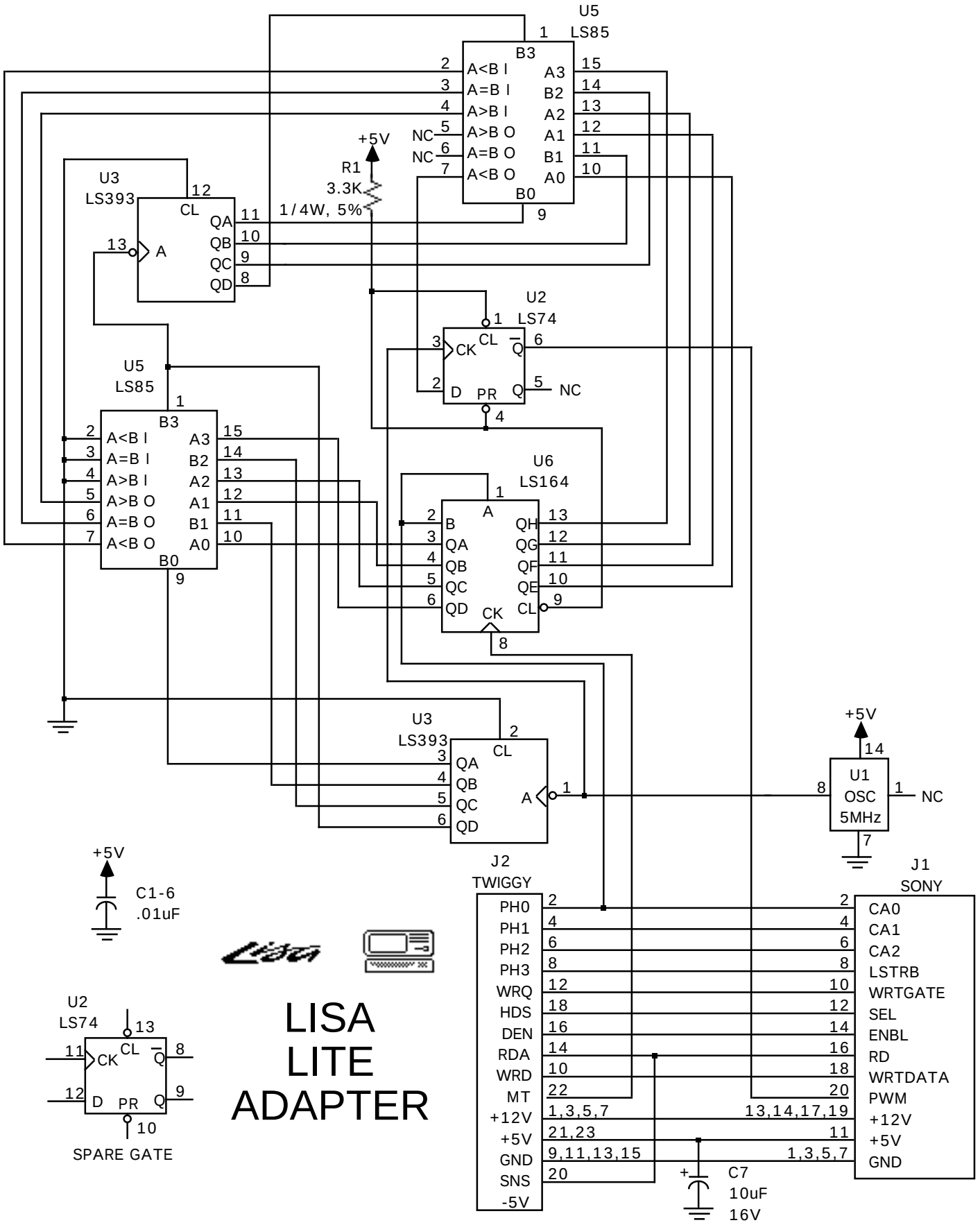
U5
LS85
B3
A<B I
A=B I
A>B I
A>B O
A=B O
A<B O
A3
B2
A2
A1
B1
A0
B0
NC
NC
+5V
R1
3.3K
1/4W, 5%
U3
LS393
CL
QA
QB
QC
QD
A
U2
LS74
CK
CL
Q
D
PR
NC
U6
LS164
B
QA
QB
QC
QD
QH
QG
QF
QE
CK
CL
U1
OSC
5MHz
NC
C1-6
.01uF
J2
TWIGGY
PH0
PH1
PH2
PH3
WRQ
HDS
DEN
RDA
WRD
MT
+12V
+5V
GND
SNS
-5V
J1
SONY
CA0
CA1
CA2
LSTRB
WRTGATE
SEL
ENBL
RD
WRTDATA
PWM
+12V
+5V
GND
C7
10uF
16V
SPARE GATE
LISA
LITE
ADAPTER