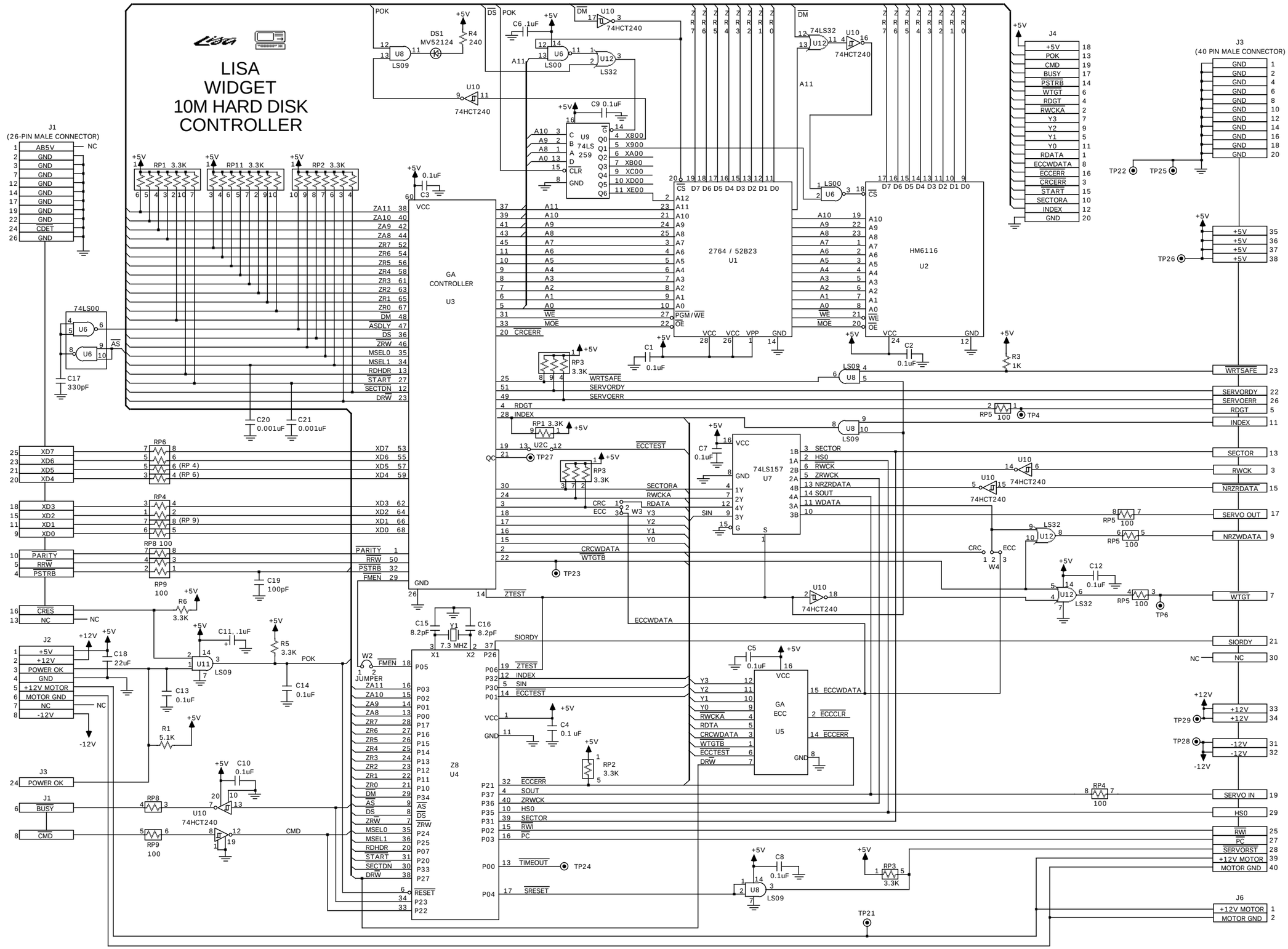
LISA
WIDGET
10M HARD DISK
CONTROLLER
J1
(26-PIN MALE CONNECTOR)
J2
J3
(40 PIN MALE CONNECTOR)
J4
J6
GA
CONTROLLER
U3
2764 / 52B23
U1
HM6116
U2
Z8
U4
GA
ECC
U5
74LS157
U7
74LS259
U9
74HCT240
74LS00
74LS32
LS09
MV52124
DS1
JUMPER
W2
W3
W4
7.3 MHZ
Y1
RP1 3.3K
RP11 3.3K
RP2 3.3K
RP3 3.3K
RP5 100
RP8 100
RP9 100
RP4
RP6
R1 5.1K
R3 1K
R4 240
R5 3.3K
R6 3.3K
C17 330pF
C18 22uF
C19 100pF
C20 0.001uF
C21 0.001uF
TP21
TP22
TP23
TP24
TP25
TP26
TP27
TP28
TP29
TP4
TP6